EN 2010

JECOTEC AG

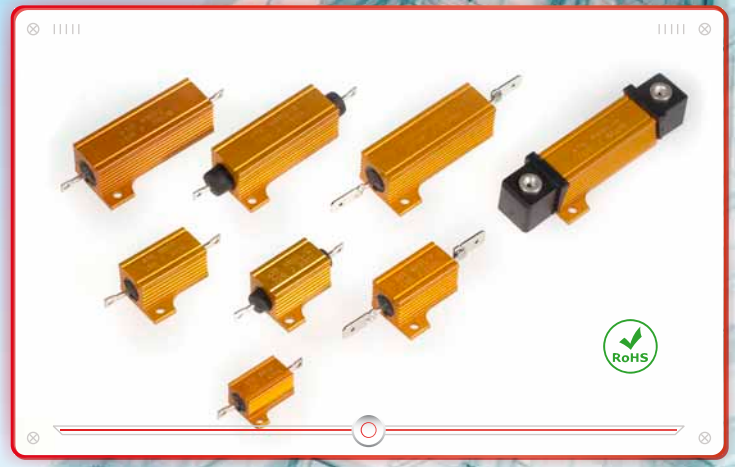

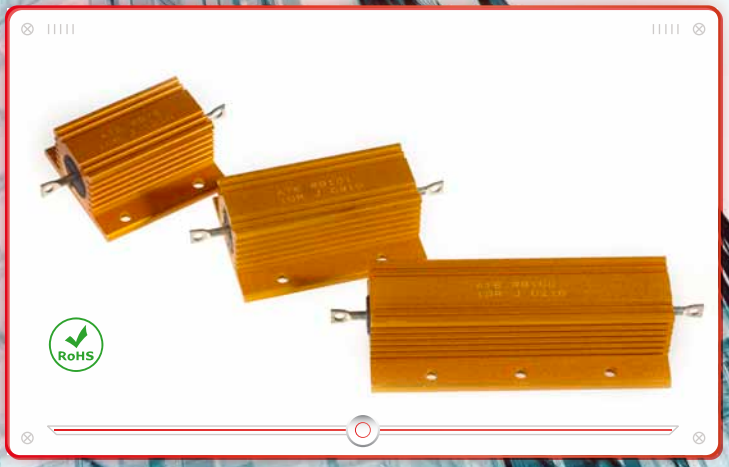

POWER RESISTORS

Every designer that works with electronic components knows well integration system, reliability and custom products problems.

ATE Electronics solves these problems since 1970 producing power resistors with high quality and technology.

We pay attention to all Customers enquiries giving our best solution and warranty at low cost and with fast delivery.

Sandro Felisio
CEO

ATE Electronics products set:

- CS axial wirewound resistors (2W to 15W), thanks to row materials of very high quality and reliability, can replace with better permormances resistors in ceramic glaze.

- Aluminium housed RB series (10W to 250W) can supply in small dimensions high power with lower operating temperature.

- CS and RB series can be supplied on request in special versions (fuse resistors, high pulse overload, non inductive...) and with custom leads (high insulation voltage terminals, faston, screw....)

- 3SM (3W) for surface mount applications wich allow the replacament of traditional axial resistors with the same electrical characteristics of 3CS type

- Anti moisture devices DAT (100W & 150W)

- Symmetry resistors SR (10W & 13W) for voltage divider and discharge of electrolitical capacitors.

- Fuse resistors RF (2W to 15W)

Looking for best quality, our intent is always obtain the Customer's satisfaction with excellent products and services.

For this ATE Electronics since 1994 was one of the first Italian Companies to be certified with quality system compliant to UNI EN ISO standards.

In feb 11th 2010 we obtained the update to UNI EN ISO9001:2008, certificate nr. 9170.ATEE

All our products are made in Italy and compliant with RoHS, MIL & CECC.

Our staff is able to satisfy all Your enquiries

ATE ELECTRONICS s.r.l.

RoHS

MADE IN ITALY

CSQ

JECOTEC AG

How to order :

Example for CS Series : 5CS 1K0 5%
- 5% — Tolerance
- 1K0 — Ohmic value
- 5CS — Type

Example for PR Series : PR100 1K0 10%
- 10% — Tolerance
- 1K0 — Ohmic value
- PR100 — Type

Example for RB Series : RB25 /1 1K0 5%
- 5% — Tolerance
- 1K0 — Ohmic value
- /1 — Terminal Type (/1= Standard)
- RB25 — Type

Example for DAT Series : DAT100 220Vac
- 220Vac — Supply voltage
- DAT100 — Device Type

For non inductive types You have to add the letter "N" after resistor type. Ex.: CSN - RBN

To order CS resistors taped on reel add the suffix "/ 73" after the resistor type. Ex.: 5CS/73 1K0 J
Quantity for reel: 1500x2CS, 1000x3CS, 5CS and 6CS

Tolerances:

K	10%	G	2%
J	5%	F	1%
H	3%	D	0.5% (for values above 1R0)

Cross-Reference ATE Electronics

Competitors	Stato	CS	RB	RB /	PR100	PR250	SMD	SR
Arcol	UK	ACS	HS	HS /	FPA100	FPA250	S, SL	-
Ccohm	TW	KNP	AH	-	-	-	-	-
Danotherm	DK	VC	HS	HS /	-	-	-	-
Ebg	USA	-	-	-	HXP200	UXP300	-	-
Huntington	USA	ALSR	TMC	-	-	HPK600	SM	-
Koa	JP	RW	-	-	-	-	-	-
Mcb	FR	-	-	-	RCEC	RCEC	-	-
Ohmite	USA	80	89, HS	-	TGH	TAP600	RW	G
Pec	IN	PIA	PHA	-	-	-	-	PYP
Powertron	DE	UT	-	-	-	-	S/SL	-
Raraohm	KR	PWR	RH	-	TPM	-	-	-
Rcd	USA	100	600	-	-	-	-	-
Res. Online	IN	-	AHR	-	-	-	-	-
Riedon	USA-DE	UT	UAL	-	KP	-	-	-
Royal-Ohm	TT	KNP	PDM	-	-	-	-	-
Tyco / Cgs	USA-PA	ES	HSA	HSX	BDS100	BDS250	SM	YP
Vishay	USA	AC, G, RS	RH, SH	-	RTOP	RPS	WSC	-
Vitrohm	PT	RX	HS	RE	-	-	-	-
Welwin - TT	UK	W	WH	WH /	BHPR	-	-	WPYP
Yageo	TW	-	RE	-	-	-	-	-

Note: The Cross-Reference listed may not be exactly equivalent, but they are good replacements / alternatives.
We recommend to download both datasheets, ATE and direct Competitor, and make a careful comparison.
If You need more information, please contact us at info@ate-electronics.com

CS Series

WIREWOUND RESISTORS SILICONE COATED 2 W TO 15 W

FEATURES

Easy replacement of vitreous enamel resistors with no cost increase and no performance loss.
The whole assembly is coated with multi-layer silicone coating to give maximum wire protection form -55°C to +350°C.
Performance improvement is obtained by close tolerance, very low temperature coefficient and excellent stability in operation under severe environmental conditions.
High level reliability due to ceramic core chemically inert and centerless ground for uniformity, selected wire element and completely welded construction terminal to terminal.

Specifications

These resistors meet or exceed the requirements of MIL-PRF-26 H specifications.

ELECTRICAL SPECIFICATIONS

- Ohmic values
E24 Series. For out of range or not standard ohmic values, consult ATE Technical Dept.
- Tolerance
Standard 5%. Available on request up to 1% (for values >R047).
- Temperature coefficient
Typical values: ±100 to ±30 ppm from R10 to Rmax
Consult factory for special applications
- Dielectric strength
500 Vdc 2CS to 6CS
700 Vdc 7CS to 12CS
- Insulation resistance
1000 MOhm minimum.
100 MOhm after moisture test
- Sovraccarico
5s at 10 times rated power
5s at 5 times rated power 2CS and 3CS
- Non inductive
Models of equivalent physical and electrical specifications are also available with non inductive Ayrton-Perry winding

MECHANICAL SPECIFICATIONS

- Terminal strength
10 lb. pull test.
- Solderability
Continuous, satisfactory coverage when tested in accordance to MIL-PRF-26 H.

MATERIALS

- Core
Ceramic steatite or alumina centerless ground
- Resistive element
Copper-nickel alloy or nickel-chrome alloy with specific temperature coefficient
- End caps
Stainless steel
- Coating
Special high temperature silicone
- Standard terminals
LF tinned copper or LF tinned copperweld
Point of measure: L + 20mm

DERATING

These resistors can be used in a temperature range form -55°C to +350°C
To use these components in applications with working temp. higher +25°C You have to make a power reduction with linear derating from nominal power to zero at 350°C

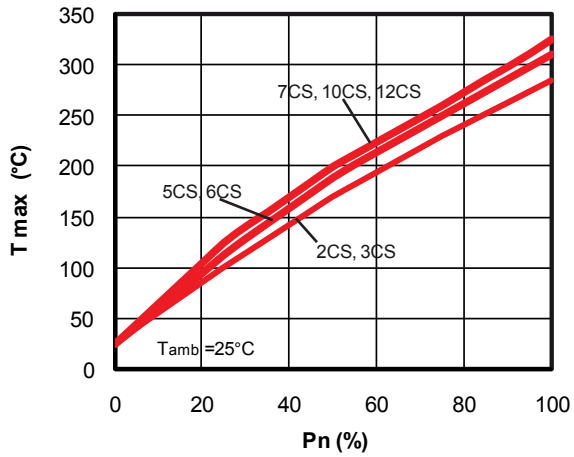

ATE Type	MIL PRF 26H Type	Rated power (W)	Resistance range (Ohm)	Voltage Limit (V)	Temperature rise (°C/W)	Weight (g)	Dimensions D (mm)	L (mm)	d (mm)
2CS	RW69V	3	0.01- 5K6	130	91	1.2	5.2±0.5	12±0.8	0.8
3CS	-	4	0.01- 10K	200	74	1.8	6±0.5	13.5±0.8	0.8
5CS	RW74U	6	0.01- 24K	380	52	3.2	8±0.5	22±1.6	0.8
6CS	RW67V	7	0.01- 27K	435	45	3.8	8±0.5	25±1.6	0.8
7CS	RW55V	10	0.01- 47K	685	30	7	9.5±0.5	35±1.6	0.9
10CS	RW68V	13	0.01- 68K	940	24	9	9.5±0.5	46±1.6	0.9
12CS	RW56V	15	0.01- 82K	1100	21	10	9.5±0.5	51±1.6	0.9

JECOTEC AG

7SR
10SR

Simmetry resistors
and/or capacitors discharge

SR Series

SYMMETRY RESISTORS AND/OR CAPACITORS DISCHARGE

SPECIFICATIONS

- Tolerance : Standard 5%. On request up to 1%
- Ohmic values : E24 Series
- Temperature coefficient : From ±100 to ±30 ppm from R10 to Rmax
- Dielectric strength: 1000 Vac
- Packing: Strip of 10 pcs or loose pcs **10SRS**, in blister
- Vibrations test : According IEC 60571-1

More technical data as 7CS and 10CS standard type

ATE Type	Basic Resistors	A (mm) toll: ±1	B (mm) max value	C (mm) toll: ±1	D (mm) toll: ±1	E (mm) toll: ±1	Weight (g)
7SR	7CS	22.2	40	15	21	9.5	9
7SR/B	7CS	22.2	40	10	16	9.5	9
10SR	10CS	31.8	50	15	21	9.5	11
10SR/B	10CS	31.8	50	10	16	9.5	11

ATE Type	MIL-R-26H Type	Rated power (W)	Resistance range (Ohm)	Voltage limit (V)
7SR	RW55	10	0.1 - 47K	685
10SR	RW68	13	0.1 - 68K	940

ATE Type	Temperature rise at rated power 7SR and 7SR/B	Temperature rise at rated power 10SR and 10SR/B
T1	ΔT = 26 °C/W	ΔT = 21.5 °C/W
T2	ΔT = 16 °C/W	ΔT = 12.3 °C/W
T3	ΔT = 15 °C/W	ΔT = 11.5 °C/W
T4 (capacitor mounted)	ΔT = 1.2 °C/W	ΔT = 1 °C/W

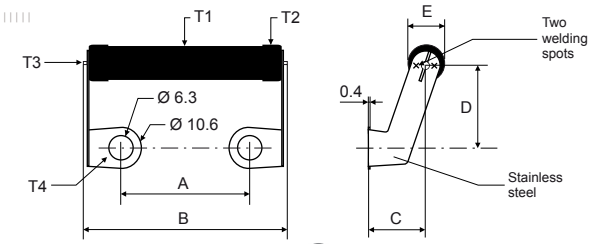

RB Series

FIXED POWER WIREWOUND RESISTORS ALUMINIUM HOUSED

FEATURES

Extruded aluminium housing provides superior heat conduction.
Housing deep finned for maximum heat dissipation at natural or forced air convection.

Gold anodized finish for maximum resistance to environmental conditions.
Special thermosetting compound with high thermal conductivity.
Winding designed to give maximum core coverage and uniformity for even heat dissipation.

Core centerless ground for maximum winding uniformity.
Marking at top surface for easy identification after mounting.
Complete welded construction terminal to terminal.

Specifications

These resistors meet or exceed the requirements of MIL-PRF-18546 G specifications.

ELECTRICAL SPECIFICATIONS

- Ohmic values
Serie E24. For out of range or not standard ohmic values, consult ATE Technical Dept.
- Tolerance
Standard 5%. Available on request up to 1%.
- Temperature coefficient
±30 ppm R > 20 Ohm
±50 ppm 1 Ohm < R < 20 Ohm
±100 ppm 0.1 Ohm < R < 1 Ohm
- Dielectric strength
1500 Vac for RB10
2500 Vac for RB25 and RB50
3500 Vac for RB75, RB101 and RB150
4500 Vac for RB100 and RB250
- Insulation resistance
10000 MOhm minimum
1000 MOhm after moisture test
- Overload
5s at 5 times rated power
- Non inductive
Models of equivalent physical and electrical specifications are also available with non inductive Ayrton-Perry winding

MECHANICAL SPECIFICATIONS

- Terminal strength
10 lb. pull test; 3 Nm x RB100 and 4 Nm x RB250 max torque
- Solderability
Satisfactory when tested in accordance with method 208 of MIL-STD-202.
The use of high temperature solder is recommended when resistors work near the maximum specified ratings

MATERIALS

- Core
Ceramic steatite or alumina centerless ground
- Resistive Element
Copper-nickel alloy or nickel-chrome alloy with specific temperature coefficient
- End caps
Stainless steel
- Encapsulant
High temperature thermosetting compound
- Housing
Aluminium with hard anodic finish
- Standard terminals
Copperweld RB10 to RB150
Stainless steel for RB100 and RB250

DERATING

ATE RB resistors have and operative temperature range from -55°C to +250°C
Derating is required for reduced chassis area and for high ambient temperature

ATE Type	MIL-PRF-18546 G Type	Rated power (W)	Max power no heatsink (W)	Resistance range (Ohm)	Voltage limit (V)	Temp. rise with heatsink (W)	Weight (g)	Heatsink dimensions (cm² x mm)
RB10	RE65	12	6	0.01-10K	265	5.1	6	415x1
RB25	RE70	25	12.5	0.01-18K	550	3	14	535x1
RB50	RE75	50	20	0.01-68K	1250	1.9	35	930x1.5
RB75	-	75	35	0.1-50K	1400	1.1	85	995x3
RB101	-	100	40	0.1-70K	1900	1	115	995x3
RB150	-	150	55	0.1-100K	2500	1	165	995x3
RB100	RE77	150	75	0.1-100K	1900	0.84	500	930x3
RB250	RE80	250	100	0.1-120K	2300	0.66	900	930x3

JECOTEC AG

Fixed power wirewound resistors aluminium housed 10 W to 250 W

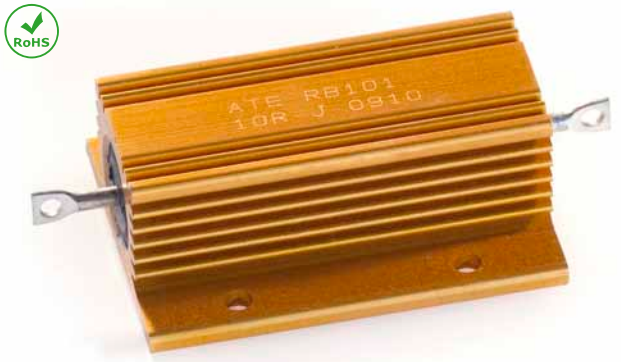

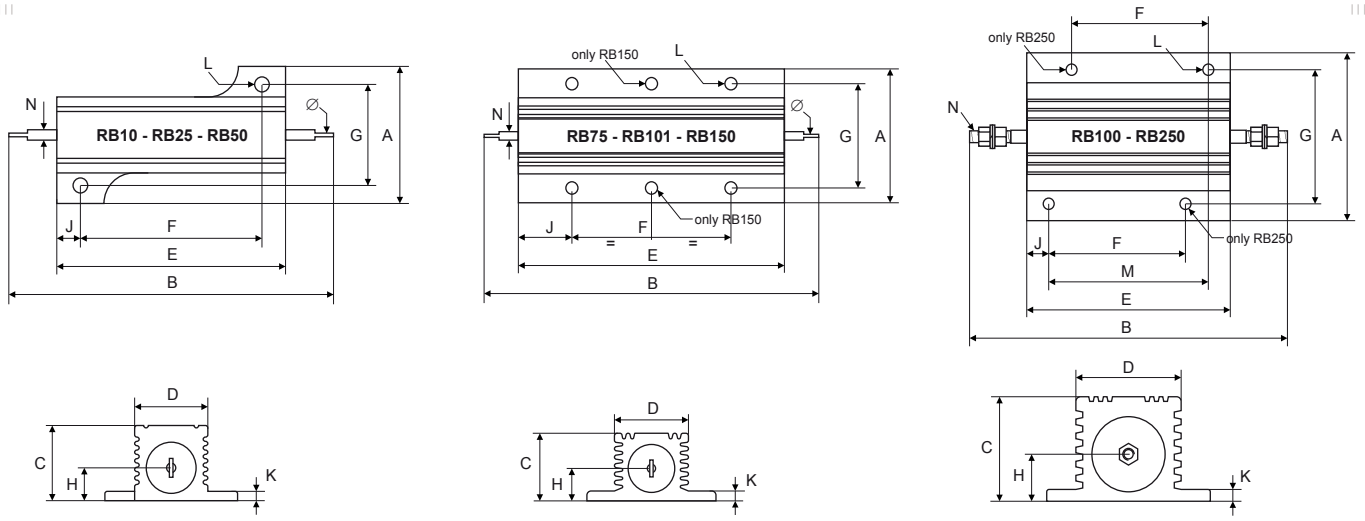

ATE Type	Dimensions (mm)													
	A	B	C	D	E	F	G	H	J	K	L	M	N	Ø
RB10	20.4	35	10	11	19	14.3	15.9	5	2.4	2	2.4	-	2	2.2
RB25	27.2	49	14	14	27	18.3	19.8	6.5	4.4	2	3.2	-	2	2.2
RB50	29.2	71	16	16	50	39.7	21.5	7	5.2	2	3.2	-	2	2.2
RB75	47	73	24	27	48	29	37	11.5	9.5	3.5	4.4	-	3	3.2
RB101	47	89	24	27	64	35	37	11.5	14.5	3.5	4.4	-	3	3.2
RB150	47	122	24	27	97	58	37	11.5	19.5	3.5	4.4	-	3	3.2
RB100	71.5	139	44.5	46	89	-	57.1	20	9.6	5	4.8	69.8	M5	-
RB250	76	178	55.6	54	114	76.2	63.5	25.5	7.8	6.3	4.8	98.4	M6	-
Tol.	±0.2	±1	±0.2	±0.2	±0.5	±0.2	±0.2	±0.2	±0.5	±0.2	±0.2	±0.2	±0.2	±0.2

RB/6 Series

FIXED POWER WIREWOUND RESISTORS ALUMINIUM HOUSED WITH LARGE CREEP DISTANCE

These resistors meet or exceed the requirements of MIL - PRF - 18546 G

ELECTRICAL SPECIFICATIONS

- Ohmic values
E24 Series. For out of range or not standard ohmic values, consult ATE Technical Dept.
- Tolerance
Standard 5%. Available on request up to 1%
- Temperature coefficient
From ±100 to ±30 ppm from R10 to Rmax
- Dielectric strength
3000Vac / 4200Vac peak
- Large creep distance
RB25/6 > 6,5mm
RB50/6 > 10mm
- Insulation resistance
10000 MOhm minimum
1000 MOhm after moisture test
- Overload
5s at 5 times rated power
- Non inductive
Models of equivalent physical and electrical specifications are also available with non inductive Ayrton-Perry winding

More technical data as RB25 / RB50 standard

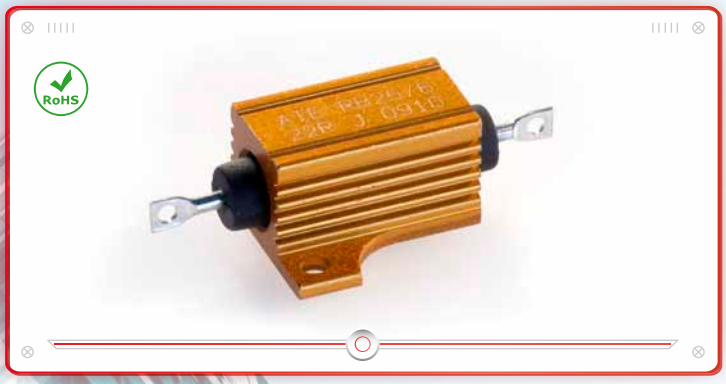

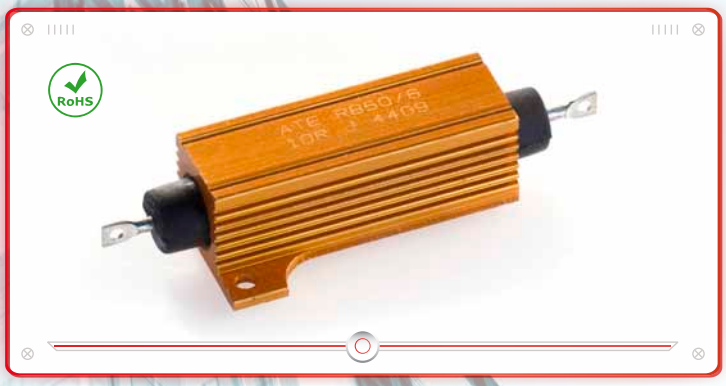

ATE Type	MIL-PRF 18546 G Type	Rated power (W)	Resistance range (Ohm)	Voltage Limit (V)	Weight (g)	Heatsink Dimensions (cm² x mm)
RB25/6	RE70	25	0.1 - 18K	550	13	535 x 1
RB50/6	RE75	50	0.1 - 68K	1250	32	930 x 1.5

ATE Type	Dimensions (mm)													
	A	B	C	D	E	F	G	H	J	K	L	M	N	Ø
RB25/6	19.8	14	27.7	14	6.5	2	18.3	24	49	3.2	12.5	8	4	2.2
RB50/6	21.5	16	29.2	16	7	2	39.7	46	75	3.2	14.5	10	6.5	2.2
Tol.	±0.2	±0.2	±0.2	±0.2	±0.2	±0.2	±0.2	±0.5	±1	±0.2	±1	±0.5	±0.5	±0.2

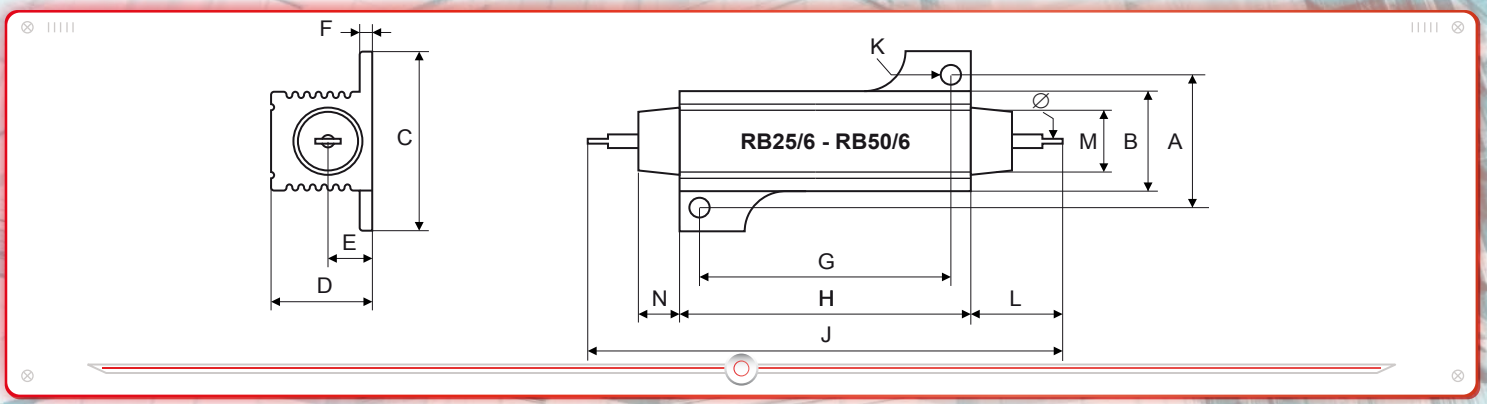

JECOTEC AG

RB25/7 Fixed power wirewound resistors
RB50/7 aluminium housed with faston leads

RB/7 Series

FIXED POWER WIREWOUND RESISTORS ALUMINIUM HOUSED WITH FASTON LEADS

These resistors meet or exceed the requirements of MIL - PRF - 18546 G specifications

ELECTRICAL SPECIFICATIONS

- Ohmic values
E24 Series. For out of range or not standard ohmic values, consult ATE Technical Dept.
- Tolerance
Standard 5%. Available on request up to 1%
- Temperature coefficient
From ±100 to ±30 ppm from R10 to Rmax
- Dielectric strength
2500Vac / 3500Vac peak
- Insulation resistance
10000 MOhm minimum
1000 MOhm after moisture test
- Overload
5s at 5 times rated power
- Non inductive
Models of equivalent physical and electrical specifications are also available with non inductive Ayrton-Perry winding
- Leads
6.35 mm Faston nickel plated steel, spot welding

More technical data as RB25 / RB50 standard

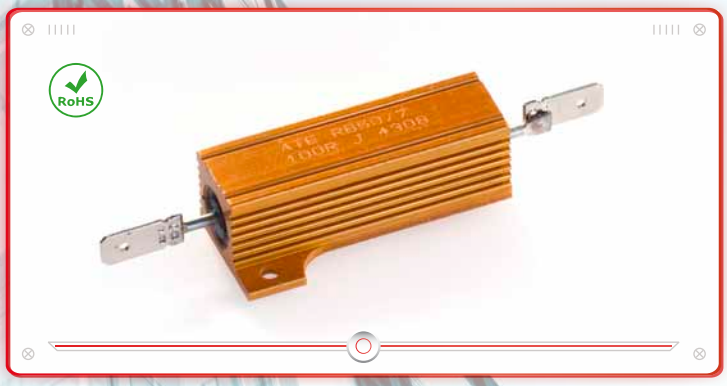

ATE Type	MIL-PRF 18546 G Type	Rated power (W)	Resistance range (Ohm)	Voltage limit (V)	Weight (g)	Heatsink dimensions (cm² x mm)
RB25/7	RE70	25	0.1 - 18K	550	13	535 x 1
RB50/7	RE75	50	0.1 - 68K	1250	32	930 x 1.5

ATE Type	Dimensions (mm)												
	A	B	C	D	E	F	G	H	J	K	L	M	P
RB25/7	19.8	14	27.7	14	6.5	2	18.3	27	69	3.2	21	6.35	7.7
RB50/7	21.5	16	29.2	16	7	2	39.7	50	91	3.2	20.5	6.35	8.2
Tol.	±0.2	±0.2	±0.2	±0.2	±0.2	±0.2	±0.2	±0.5	±2	±0.2	±2	-	±1

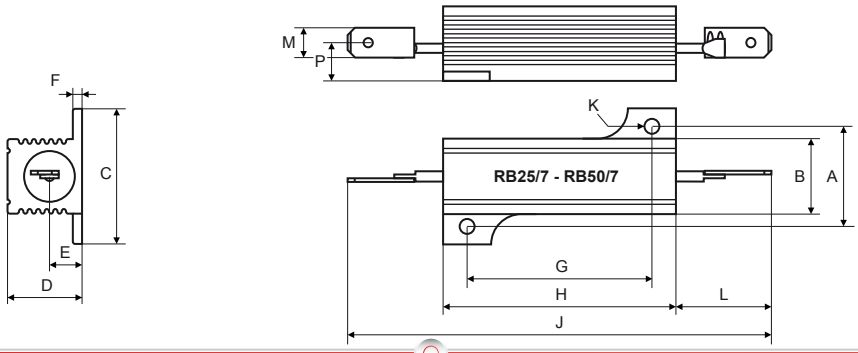

RB/8 Series

FIXED POWER WIREWOUND RESISTORS ALUMINIUM HOUSED WITH SCREW LEADS (TOP)

These resistors meet or exceed the requirements of MIL - PRF - 18546 G specifications

ELECTRICAL SPECIFICATIONS

- *Ohmic values*
  E24 Series. For out of range or not standard ohmic values, consult ATE Technical Dept.
- *Tolerance*
  Standard 5%. Available on request up to 1%
- *Temperature coefficient*
  From ±100 to ±30 ppm from R10 to Rmax
- *Dielectric strength*
  2500Vac / 3500Vac peak
- *Insulation resistance*
  10000 MOhm minimum
  1000 MOhm after moisture test
- *Overload*
  5s at 5 times rated power
- *Non inductive*
  Models of equivalent physical and electrical specifications are also available with non inductive Ayrton-Perry winding
- *Leads*
  M4 threaded hole
- *Terminal screw tightening torque*
  1,5Nm (static)

More technical data as RB50 standard

ATE Type	MIL-PRF 18546 G Type	Rated power (W)	Resistance range (Ohm)	Voltage limit (V)	Weight (g)	Heatsink dimensions (cm² x mm)
RB50/8	RE75	50	0.1 - 68K	1250	52	930 x 1.5

ATE Type	Dimensions (mm)															
	A	B	C	D	F	G	H	J	K	L	M	N	P	Q	R	S
RB50/8	21.5	16	29.2	16	2	39.7	50	79.5	3.2	14.5	M4	8	65	17.5	18.5	16.5
Tol.	±0.2	±0.2	±0.2	±0.2	±0.2	±0.2	±0.5	±2	±0.2	±0.5	-	-	±1	±0.5	±0.5	±0.5

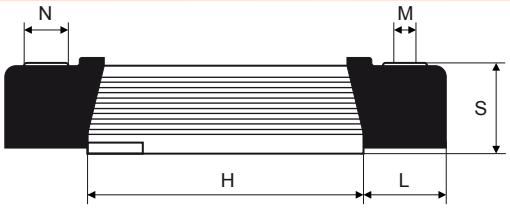

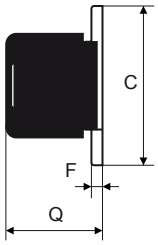

Connection screws supplied with the resistor

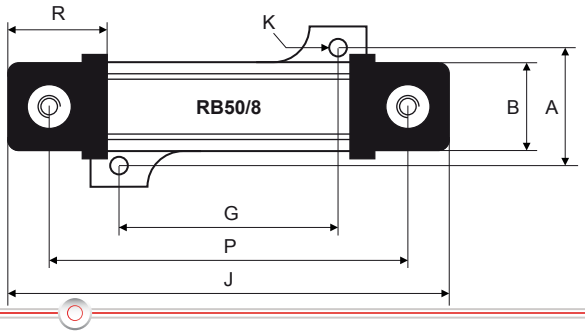

JECOTEC AG

RB106 Fixed power wirewound resistors
RB256 aluminium housed with large creep distance

RB106 Series

FIXED POWER WIREWOUND RESISTORS ALUMINIUM HOUSED WITH LARGE CREEP DISTANCE

These resistors meet or exceed the requirements of MIL - PRF - 18546 G specifications

ELECTRICAL SPECIFICATIONS

- Ohmic values
E24 Series. For out of range or not standard ohmic values, consult ATE Technical Dept.
- Tolerance
Standard 5%. Available on request up to 1%
- Temperature coefficient
From ±100 to ±30 ppm from R10 to Rmax
- Dielectric strength
5000Vac / 7000Vac peak
- Large creep distance
RB106 > 22mm
RB256 > 25 mm
- Insulation resistance
10000 MOhm minimum
1000 MOhm after moisture test
- Overload
5s at 5 times rated power
- Non inductive
Models of equivalent physical and electrical specifications are also available with non inductive Ayrton-Perry winding

More technical data as RB100 and RB250 standard

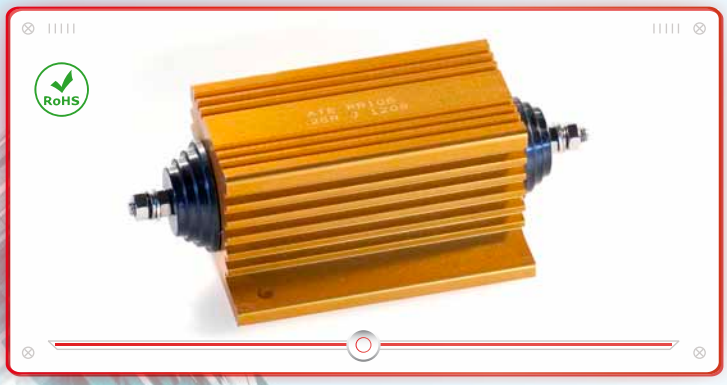

ATE Type	MIL-PRF 18546 G Type	Rated power (W)	Resistance Range (Ohm)	Voltage limit (V)	Weight (g)	Heatsink dimensions (cm² x mm)
RB106	RE77	150	0.1 - 100K	1900	500	930 x 3
RB256	RE80	250	0.1 - 120K	2300	900	930 x 3

ATE Type	Dimensions (mm)																
	A	B	C	D	E	F	G	H	J	K	P	Q	R	S	T	V	Z
RB106	57.1	46	71.5	44.5	20	5	69.8	89	139	4.8	-	-	25	9.6	M5	32	12
RB256	63.5	54	76	55.6	25.5	6.3	98.4	114	178	4.8	22.2	76.2	32	7.8	M6	32	16
Tol.	±0.2	±0.5	±0.5	±0.5	±0.5	±0.5	±0.2	±0.5	±2	±0.2	±0.2	±0.2	±0.2	±0.5	-	-	-

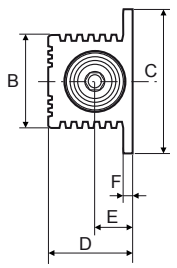

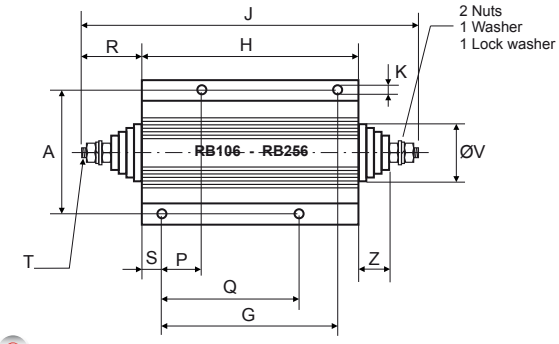

ANTI MOISTURE DEVICES

DAT Series

FEATURES

One of the main causes for electrical troubles on electrical and electronic sets is due to the moisture which is formed on components during variation of the ambient temperature.
A simple and economic way to avoid these problems, consists on application of anti-condensation devices (Heaters) which maintain the temperature inside the enclosure some degrees higher than the ambient temperature in order to prevent moisture condensation.
The Heaters DAT100 and DAT150 have been developed for this specific use.
Their main features are :
- Surface temperature limited to 70°C allows assembling without problems.
- A thermoswitch permits maximum power at very low temperatures, then reduces the power dissipated till turn off the devices at +55°C.
- The DAT models are provided with simple clip mounting for 35mm DIN rail.
- Use of power wirewound resistors, under MIL-PRF-18546 G specs., increase reliability and suitable supply voltage.

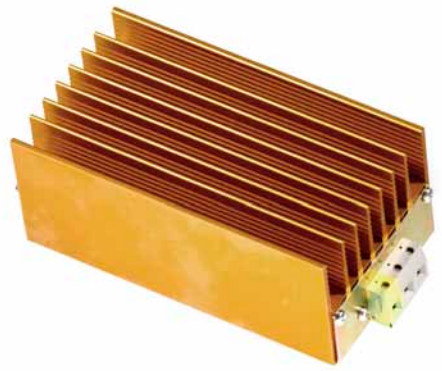

ELECTRICAL SPECIFICATIONS

Specifications

- Max power ratings : DAT100 = 100W
  DAT150 = 150W
- Supply voltage: Standard 220 Vac ± 20%
  On request any supply voltage from 24 Vac to 220 Vac
- Dielectric strength: 2000 Vac for any type
- Insulation resistance: 1000 MOhm minimum at 500 Vdc

$P = A \times \Delta T \times K$
A = Console internal surface (m²)
ΔT = Temperature difference (°C)
K = 3.5W/m² °C for plastic console
K = 5.5W/m² °C for iron plate (closed room)

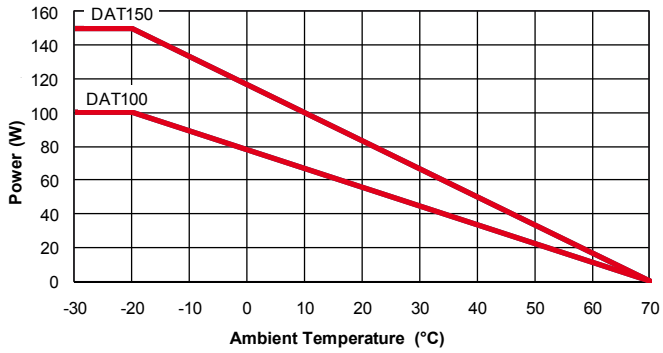

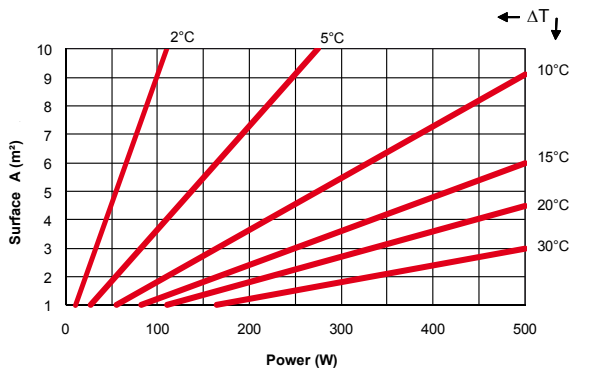

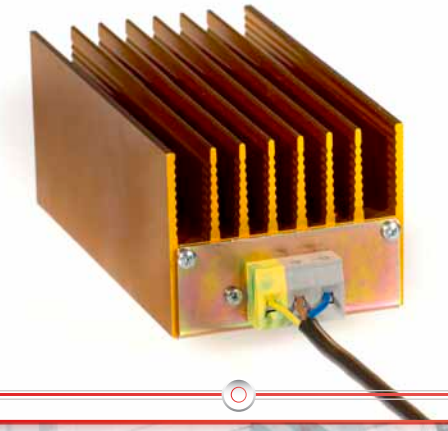

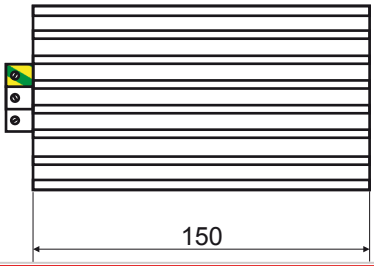

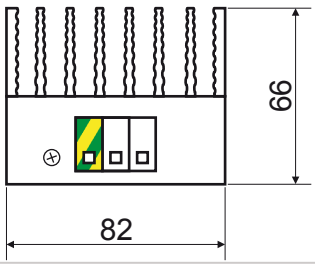

PR100-101
PR102-103

Thick film power resistors

THICK FILM POWER RESISTORS PR100

PR Series

FEATURES

Very good ratio Power / Volume.
Easy mounting and wiring with significant cost advantages.
Non inductive performance for high frequency applications.
One model for power up to 150W.
Suited to UL94-V0 application.
SOT227 configuration.

Specifications

ELECTRICAL SPECIFICATIONS

- Power rating : 100W (PR102 2 x 50W)
- Max power not trimmed : 150W (heatsink at 70°C)
- Resistance range: From 1R0 to 1MOhm, E12 series
- Tolerance: Standard 10%, up to 1% on request
- Temperature coefficient : ±100 ppm/°C
- Max Work Voltage : 1500 Vac
- Work Temperature Range : From -55°C to +155°C
- Dielectric Strength : 2500 Vac
- Insulation resistance : > 10^5 MOhm at 500V
- Partial discharge : < 80 pC @ 2000 Vac (on request)
- Self inductance : 40 nH
- Capacitance to heatsink : < 30 pF
- Overload : 2 Pn x 10 s
- Thermal resistance : 0.5 °C/W
- Heatsink flatness : 0.05 mm Max
- Heatsink surface finish : 6.3µm Max
- Thermal grease : required
- Max torque for contact : 1.2 Nm (static)
- Max torque for mounting : 1.5 Nm (static)
- Weight : 18 g (PR100 / PR101)
  24 g (PR102 / PR103)

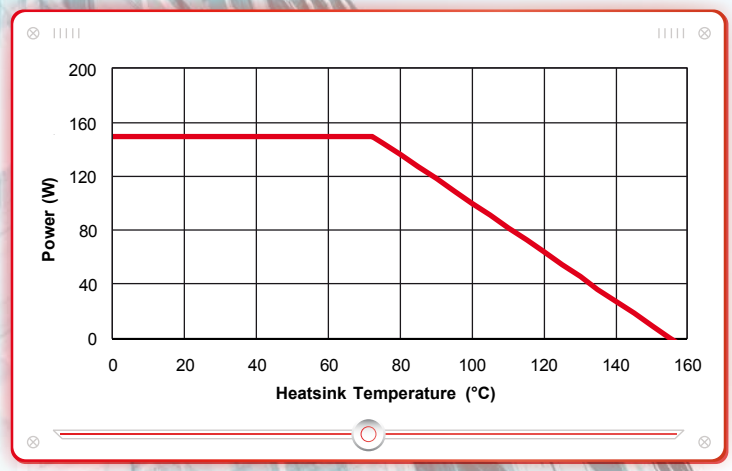

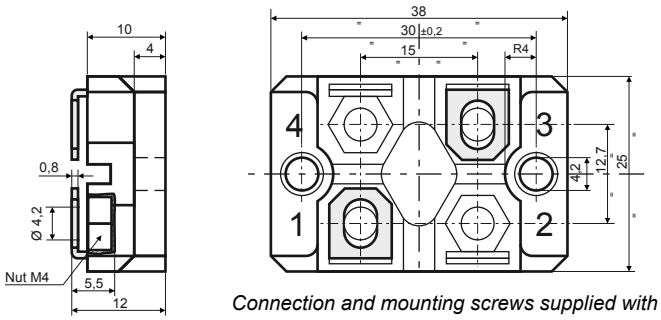

Connection and mounting screws supplied with the resistor

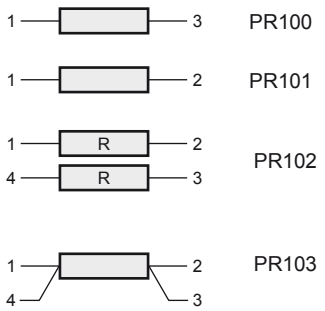

THICK FILM POWER RESISTORS PR250

PR Series

FEATURES

Very good ratio Power / Volume
Easy mounting and wiring with significant cost advantages.
Non inductive performance for high frequency applications.
One models for power applications up to 500W.
Suited to ULV94-V0 application.

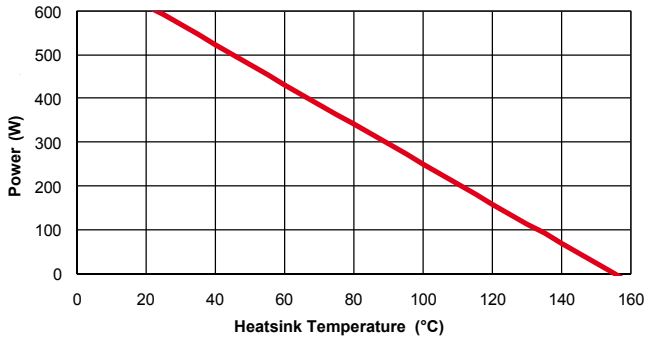

ELECTRICAL SPECIFICATIONS

Specifications

-Power rating: 250W (heatsink at 100°C)
-Resistance range: From 1R0 to 1MOhm, E12 series
-Tolerance: Standard 10%, up to 1% on request
-Temperature coefficient: ±100 ppm/°C
-Max Work. Voltage: 5000 Vac
-Work Temp. Range: Da -55°C a +155°C
-Dielectric Strength: 7000 Vac (12000 Vac x PR250T)
-Insulation resistance: > 10^5 MOhm at 500V
-Creep distance: 42 mm (65 mm x PR250T)
-Air gap distance: 16 mm (29mm x PR250T)
-Partial discharge: < 10 pC @ 5000 Vac
-Self inductance: 80 nH
-Parallel capacitance: 40 pF
-Capacitance to heatsink: < 120 pF
-Overload : 4 Pn x 10 s
-Thermal resistance: 0.15 °C/W
-Heatsink flatness: 0.05 mm Max
-Heatsink surface finish: 6.3 µm Max
-Thermal grease: Required
-Max torque for contacts: 2Nm (static)
-Max torque for mounting: 2Nm (static)
-Weight: 100 g (130 gx PR250T)
-Options: - For values R039 <R< 1R0 is available Metal Foil type **PR250M**
- Cable terminals **PR250C / PR250TC**

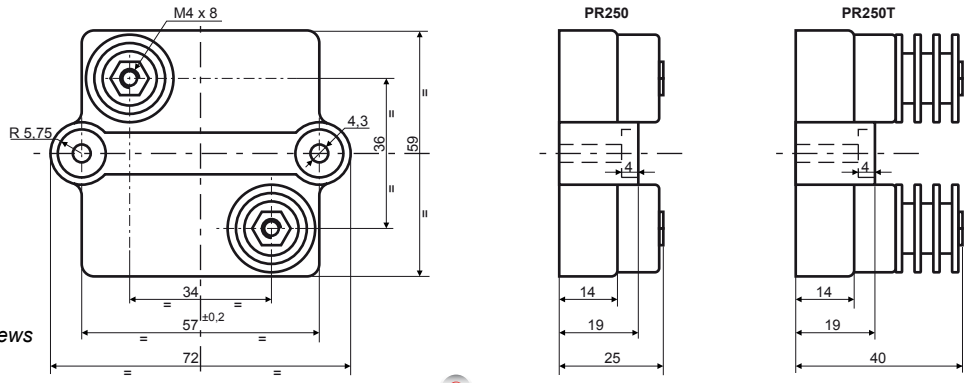

Connection and mounting screws supplied with the resistor

PR254 Thick film power resistors
PR254T

THICK FILM POWER RESISTORS PR254

PR Series

FEATURES

Very good ratio Power / Volume
Easy mounting and wiring with significant cost advantages.
Non inductive performance for high frequency applications.
One models for power applications up to 500W.
Suited to ULV94-V0 application.

Specifications

ELECTRICAL SPECIFICATIONS

-Power rating: 250W (heatsink at 100°C)
-Resistance range: From 1R0 to 1MOhm, E12 series
-Tolerance: Standard 10%, up to 1% on request
-Temperature coefficient: ±100 ppm/°C
-Max Work. Voltage: 5000 Vac
-Work Temp. Range: From -55°C to +155°C
-Dielectric Strength: 7000 Vac (12000 Vac x PR254T)
-Insulation resistance: > 10^5 MOhm at 500V
-Creep distance: 42 mm (65 mm x PR254T)
-Air gap distance: 16 mm (29mm x PR254T)
-Partial discharge: < 10 pC @ 5000 Vac
-Self inductance: 80 nH
-Parallel capacitance: 40 pF
-Capacitance to heatsink: < 120 pF
-Overload : 4 Pn x 10 s
-Thermal resistance: 0.15 °C/W
-Heatsink flatness: 0.05 mm Max
-Heatsink surface finish: 6.3 µm Max
-Thermal grease: Required
-Max torque for contacts: 2Nm (static)
-Max torque for mounting: 2Nm (static)
-Weight: 125 g (155 g x PR254T)
-Opzioni: Cable terminals **PR254C / PR254TC**

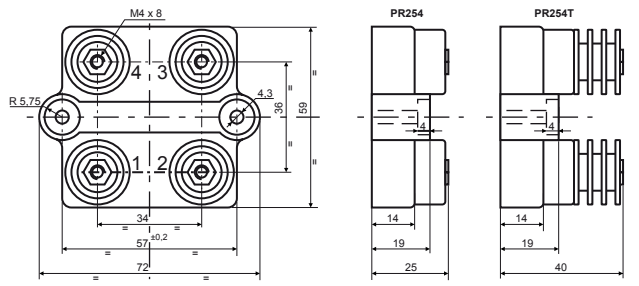

Connection and mounting screws supplied with the resistor

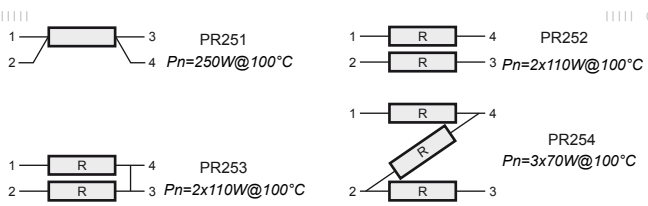

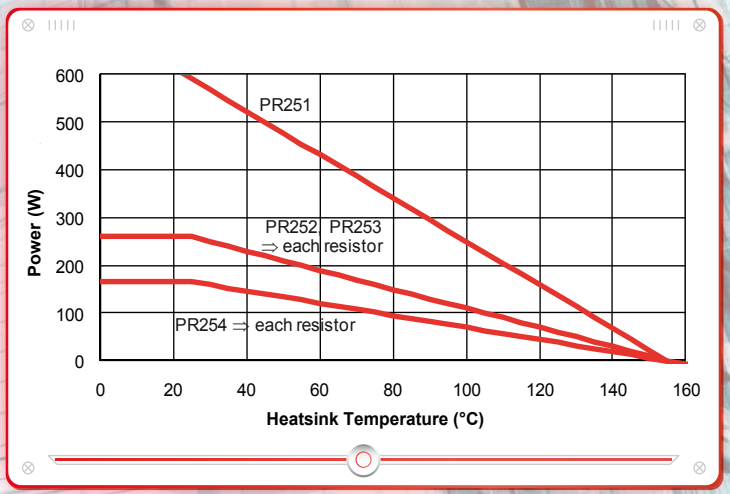

SURFACE MOUNT POWER WIREWOUND RESISTORS

3SM Series

FEATURES

Easy replacement of axial power wirewound resistors without performance loss.
Performance improvement is obtained by close tolerance, very low temperature coefficient and stability in operation under severe environmental conditions.
High level reliability due to ceramic core chemically inert and centerless ground, selected wire element and completely welded construction terminal to terminal.
The whole assembly is silicon coated and thermoplastic UL94-V0 moulded to give maximum wire protection from -55°C to +220°C.

Specifiche

TECHNICAL SPECIFICATIONS

- Power rating : 3 W at 70°C, mounted on FR4 board 1.6 mm
- Resistance range : from R10 to 10K. E12 series, other on request
- Tolerance : Standard 5%, up to 1% on request
- TCR : Typical values ±100 to ±30 ppm from R10 to 10K
- Maximum continuous working voltage : 200 Vac
- Thermal resistance : 50 °C/W
- Derating : Linear from 70°C to 220°C
- Dielectric Strength : 1000 Vac
- Insulation resistance : 1000 MOhm minimum
- Overload : 5s at 5 times power rating
- Non inductive : Ayrton-Perry winding, max. 4K7
- Weight : 2.5 g
- Climatic category : 55/220/56
- Packaging : Reel 330 mm, blister 32 mm, pitch 12 mm,700 pcs

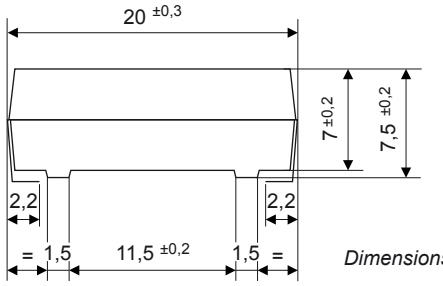

Dimensions (mm)

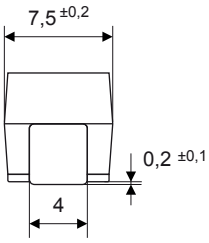

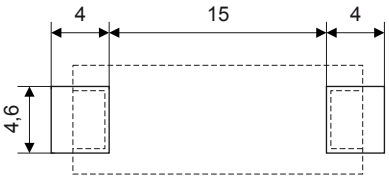

Recommended pad size

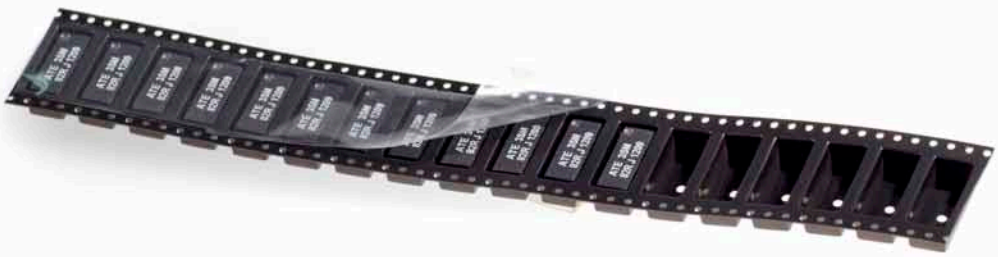

EN 2010

JECOTEC AG

JECOTEC AG

Riedstrasse 14
CH-8953 Dietikon
Switzerland
Tel.: +41 (0)44 810 29 08
E-Mail: welcome@jecotec.ch
Web: www.jecotec.ch

JECOTEC AG